ITT

Interconnect Solutions
Cannon, VEAM, BIW

Providing 100% reliable
electrical connections for over 65 years
on commercial and military aircrafts
and over a 150 billion miles flown

Engineered for life

Table of Contents

- Available Rear Release/Rear Removable Front Release/Front Removable
- Low Insertion force contacts.
- Both environmental and non-environmentl versions.
- Polarizing post that are removable from the mating face.
- Field replaceble inserts.
- Up to 150 Size #22 contacts per connector.
- Crimp, coax, twinax, printed circuit and wire wrappable post style contacts.
- Uses standard ARINC 600, crimp, insertion/ extraction tooling.

Receptacle SGA

Plug SGA

Conductive Dust Caps	Part Numbers (black)
Plug	025-1183-002
Receptacle	025-1185-002

SGA connectors utilize all the Signal cavity inserts and contacts from the ARINC 600 connector series. It was designed to be used where there are space constraints in which a standard ARINC 600 connector can not be used. ITT's SGA connector fills the need for a 150 maximum contact connector with a smaller shell design than Shell Size 2 of ARINC 600, and has more contacts available than single gang DPX with 106 Size 22 contacts.

Materials and Finishes

		SGA*D	SGA*E	SGA*F	Specifications
Shell	Material	Aluminum alloy	Aluminum alloy	Aluminum alloy	QQ-A-591/A380
	Finish	Clear chromate over cadmium	Clear chromate over cadmium	Clear chromate over cadmium	QQ-P-416
Insulator	Material	Thermoplastic	Thermoplastic	Thermoset	N/A
Contacts	Material	Copper alloy	Copper alloy	Copper alloy	QQ-C-533
	Finish	Gold	Gold	Gold	MIL-G-45204
	Termination	Crimp	Crimp	P.C/Wrap Post	N/A
Grommets/Seals	Material	N/A	Silicone-based Elastomer	N/A	N/A
O-Ring	Material	N/A	Silicone-based Elastomer	N/A	N/A

How to Order (refer to ARINC 600 [BKA] pages 12-14 for contact information

SGA 4 R F 150 S 00 01 FO

- CONNECTOR SERIES
- SHELL STYLE
- RoHS
- CLASS
- CONTACT ARRANGEMENT
- CONTACT TYPE (PIN OR SOCKET)
- CONNECTOR MOUNTING MODIFIER
- POLARIZING POSITION
- CONTACT MODIFIER

ROHS finish zinc plate per ASTM-B-633 with trivalent chromate coating

CONNECTOR SERIES
SGA (Single Gang ARINC 600)

SHELL STYLE
3 - Plug (Rack Side)
4 - Receptacle (Box Side)

RoHS version
R - RoHS compatible

CLASS
C - Non-environmental with Grommet only, insulators are not potted into the connector shell.
D - Non-environmental (rear relase crimp contacts).
E - Environmentally sealed (rear release crimp contacts).
F - Non-environmental (front release, printed circuit or wire wrap posts).
R - EMI/RFI Protected & Environmentally sealed, 0-ring omitted (plug only). (Reference ITTC Phoenix)

CONTACT ARRANGEMENT
(See ARINC 600 (BKA) contact arrangements, pages12-14)

CONTACT TYPE
P - Pin Contacts
S - Socket Contacts

CONNECTOR MOUNTING MODIFIER
Mounting modifiers 00, 03, 06, 14, 15, hole location is .705 basic from connector vertical centerline.
00 - .151 Dia. Mounting holes.
03 - .156 with #4-40 Self-Locking Clinch Nuts (ESNA #22NCFMA2-40) 4 per connector.
06 - .188 Dia. For #6-32 Clinch nuts (ESNA #12NCFMA2-62) 4 per connector.
14 - .137 Dia, Countersunk 82˚x .230 Dia., Engaging face of mounting flange.
15 - .137 Dia, Countersunk 82 x .230 Dia., Engaging face of mounting flange. Supplied with slant shield grounding spring.

Mounting modifiers 05, 07, 08, 09, 10, 11, 12, 13, hole location is .650 basic from connector vertical centerline.
05 - .208 Dia. for Floating Eyelet
07 - .212/.204 Slot 4 places.
08 - .120 Dia. Countersunk 82˚x .230 Dia., Engaging face of mounting flange.
09 - .120 Dia. Countersunk 82˚x .230 Dia., Rear face of mounting flange.
10 - .120 Dia. Countersunk 100˚x .230 Dia., Engaging face of mounting flange.
11 - .120 Dia. Countersunk 100˚x .230 Dia., Rear face of mounting flange.
13- .137 Dia. Countersunk 82˚x .230 Dia., Rear face of mounting flange.

POLARIZING POSITION
01 - 36 Positions. (See Chart page 28)
When the last two digits are omitted, the polarizing posts will not be assembled and position number is not stamped on the connector. This allows the user to position the post and stamp the appropriate number on the shell. If the last two digits are "00", polarizing posts are not supplied with the connector.

CONTACT MODIFIER
Refer to page 17 for replacement contact part numbers and required termination tooling information.
(Blank) - With standard Crimp type Rear release contacts.
F0 - Contacts are not supplied with connector (FO not stamped on connector.)
SA - Front release .025 Dia. x .150 Solder Post Size 22 Sockets
SB - Front release .025 Dia. x .250 Solder Post Size 22 Sockets
SC - Front release .025 Dia. x .375 Solder Post Size 22 Sockets
SD - Front release .025 Dia. x .500 Solder Post Size 22 Sockets
WA - Front release .025 Sq. x .250 (1 Wrap)
WB - Front release .025 Sq. x .375 (2 Wrap)
WC - Front release .025 Sq. x .500 (3 Wrap)
WD - Front release .025 Sq. x .641 (3 Wrap)

Dimensions shown in inches (mm)
Specifications and dimensions subject to change

Plug Shell Dimensions

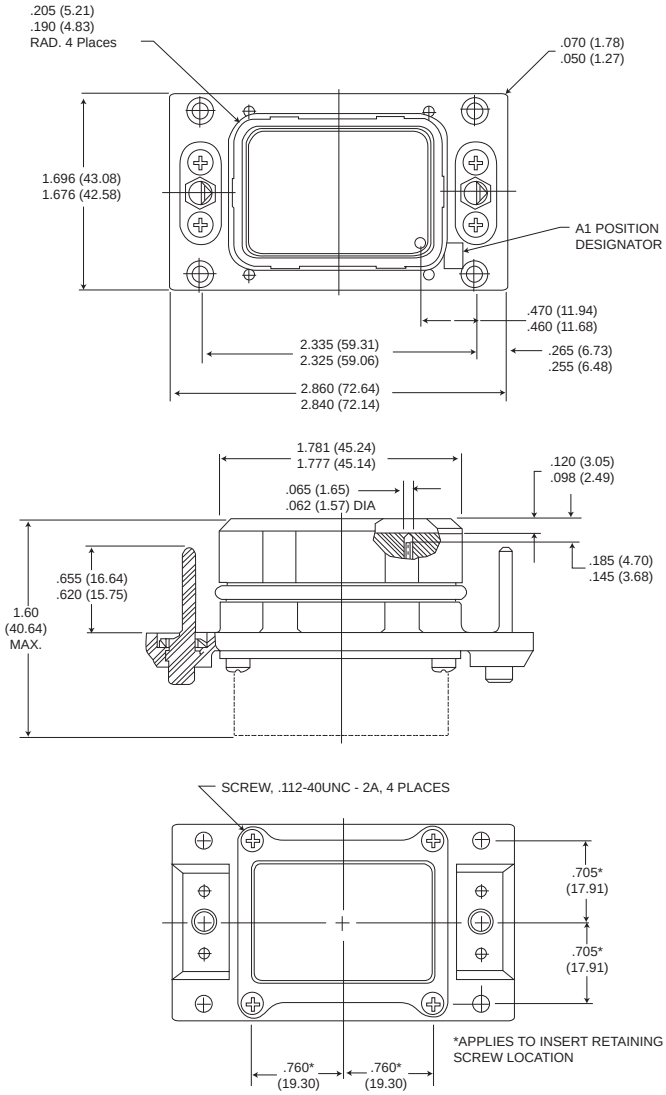

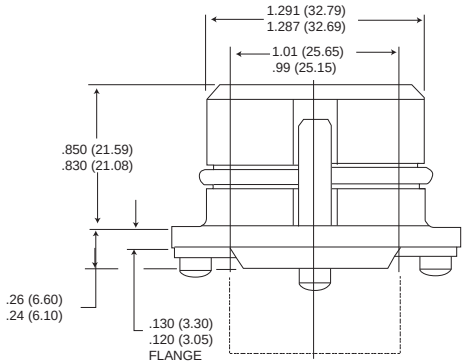

Recommended Panel Cutout

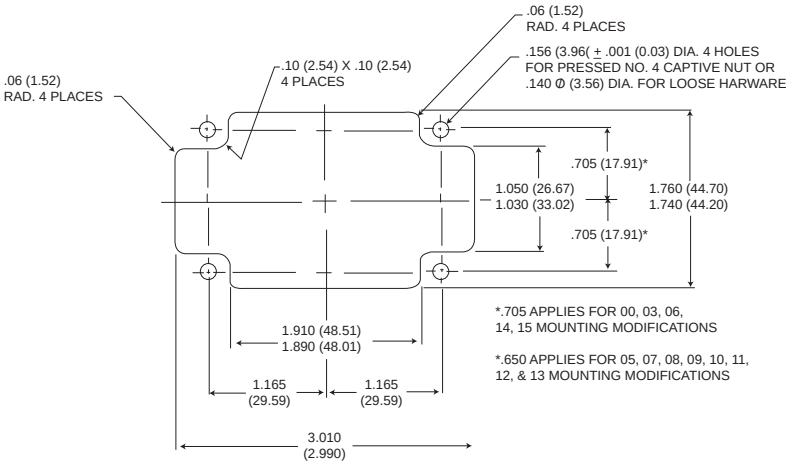

Receptacle Shell Dimensions

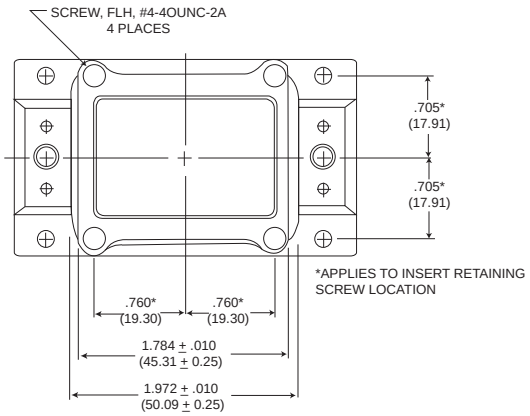

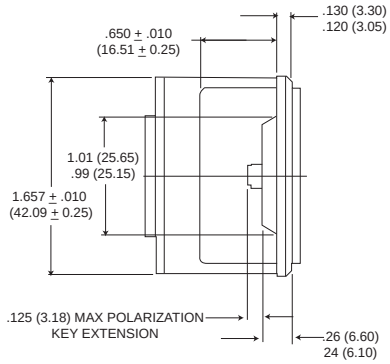

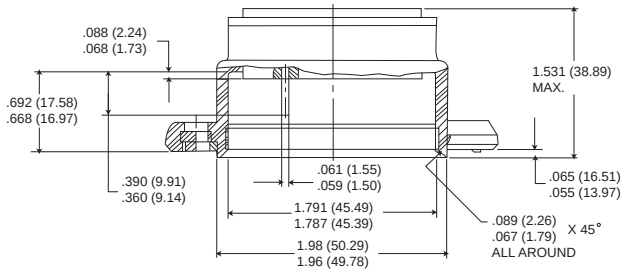

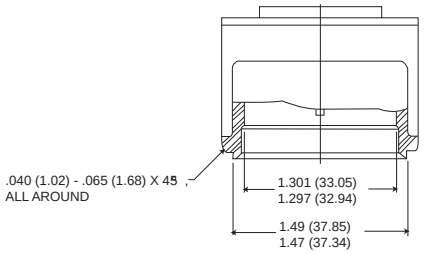

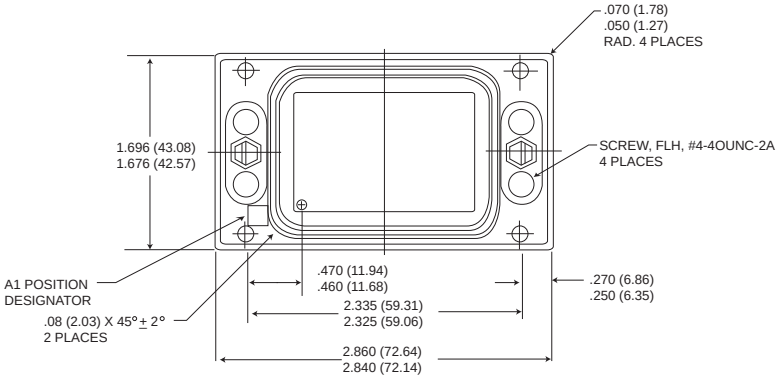

Recommended Panel Cutout

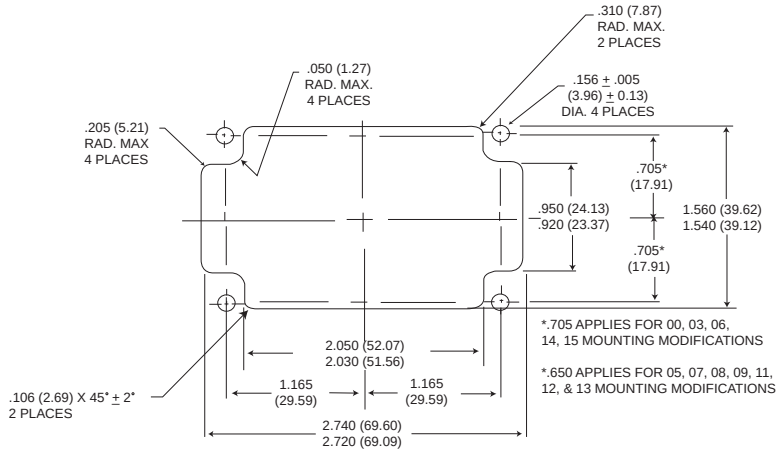

Dimensions shown in inches (mm)
Specifications and dimensions subject to change

Polarization

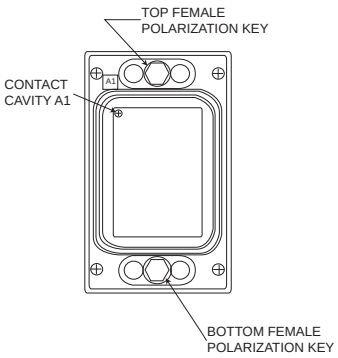

RECEPTACLE (BOX SIDE)

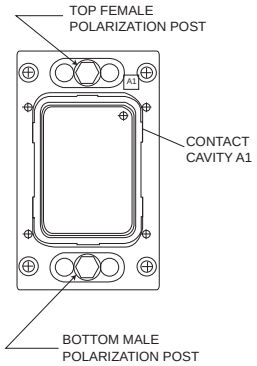

Plug (Rack Side)

Polarizing Positions

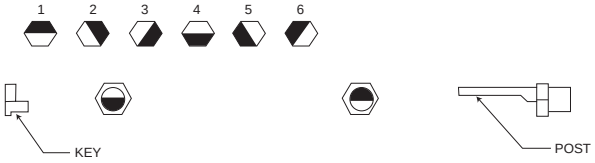

Key **Post**

Position	Connector Receptacle		Connector Plug	
	Top Key	Bottom Key	Top Post	Bottom Post
01	1	1	4	4
02	3	4	2	1
03	2	4	3	1
04	1	4	4	1
05	6	4	5	1
06	5	4	6	1
07	4	5	1	6
08	3	5	2	6
09	2	5	3	6
10	1	5	4	6
11	6	5	5	6
12	5	5	6	6
13	4	6	1	5
14	3	6	2	5
15	2	6	3	5
16	1	6	4	5
17	6	6	5	5
18	5	6	6	5
19	4	1	1	4
20	3	1	2	4
21	2	1	3	4
22	4	4	1	1
23	6	1	5	4
24	5	1	6	4
25	4	2	1	3
26	3	2	2	3
27	2	2	3	3
28	1	2	4	3
29	6	2	5	3
30	5	2	6	3
31	4	3	1	2
32	3	3	2	2
33	2	3	3	2
34	1	3	4	2
35	6	3	5	2
36	5	3	6	2